Lectures on Chapter 21: Current and Direct Current Circuits

Current

An electric current is a stream of moving charge, e.g., a stream of conduction electrons moving through a copper wire. Note that the wire is electrically neutral since the copper atoms (or ions) are a fixed background through which the electrons move.

$$\begin{array}{ccccccccc} \ominus & \rightarrow & \ominus & \rightarrow & \ominus & \rightarrow & \ominus & \rightarrow & \\ \ominus & \rightarrow & & & & & \ominus & \rightarrow & \\ \oplus & & \oplus & & \oplus & & \oplus & & \oplus \end{array}$$

Analogy: water in a hose. Water in a hose is not an electric current since the moving water molecules are neutral. Another analogy is car flow down the freeway. Charge is conserved; an electron entering one end of the wire comes out the other; it doesn't vanish in the middle somewhere. Same for water in a hose - water that goes into the hose comes out of the hose. Under steady-state conditions (current the same for all times), the current flowing past A must also flow past B.

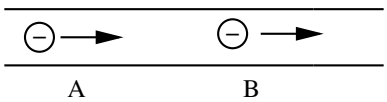

An isolated conductor is an equipotential; no current flows in it. But if we attach a wire to a battery, the ends of the wire will be at different potentials. A difference in potential means that current will flow to the lower potential. (Think of tilting a pipe with water in it). A potential difference means that there is an electric field in the wire pushing the charges.

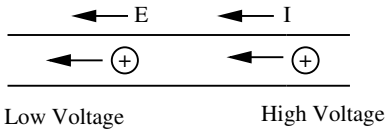

To define current, imagine an imaginary plane passing through a wire like a screen in a pipe. If dq is the amount of charge passing through the plane in a time dt, then the current I is given by

$$I = \frac{dq}{dt}$$

The current is the amount of charge passing through the plane per unit time. $\Longrightarrow$ $q = \int_0^t dq = \int_0^t I dt$ is the amount of charge passing through the plane in the time interval from 0 to t.

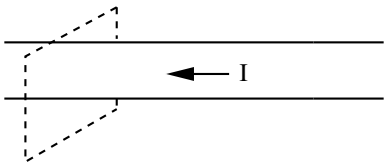

Units: $[I]$ = Coulombs/sec = amperes (amperes = "amp").

$$1\frac{C}{s} = 1\,\text{ampere} = 1A \tag{1}$$

I is a scalar (a number), not a vector. But an arrow is used to show the direction of current flow. The arrow is in the direction that positive carriers would flow.

$$\begin{array}{ccc} \oplus \rightarrow \oplus \rightarrow & \qquad\qquad & \ominus \rightarrow \ominus \rightarrow \ominus \rightarrow \\ I \rightarrow & & \leftarrow I \end{array}$$

If the circuit branches,

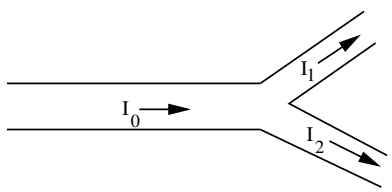

$$I_0 = I_1 + I_2 \tag{2}$$

because charge is conserved. This is called the **junction rule**. It is one of Kirchhoff's rules. It is important in analyzing circuits.

Current Density

For a current that is uniform over the cross section of a wire,

$$J = \frac{I}{A} \tag{3}$$

where A is the cross sectional area of the conductor or wire. Cross-sectional area: Think of slicing salami. The area of the salami slice is the cross sectional area. The current density J is the current per unit cross-sectional area of the conductor.

Units: $[J]$ = Ampere/m^2

$\vec{J}$ is a vector that points in the direction of $\vec{E}$. (We need $\vec{E}$ to make current flow.) The total current I through a surface S is

$$I = \int_S \vec{J} \cdot d\vec{a} \tag{4}$$

I is the flux of the current density $\vec{J}$ through a surface S. This holds even if $\vec{J}$ is not uniform over the surface S, i.e. if $\vec{J}(\vec{r})$ varies from point to point on S.

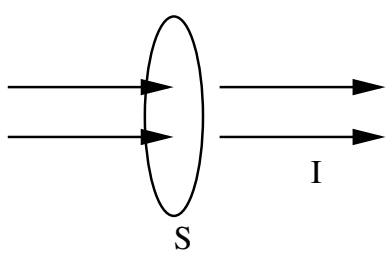

Microscopically, the current density is the product of the amount of charge per unit volume and how fast the charge is moving:

$$\begin{aligned} J &= (\text{charge density}) \cdot (\text{velocity of charge density}) \\ \vec{J} &= ne\vec{v}_d \end{aligned}$$

n = number of charge carriers per unit volume
e = charge of each carrier (usually they are electrons)
$\vec{v}_d$ = "drift" velocity of charge density

Derivation: A piece of wire of length L and cross sectional area A has charge.

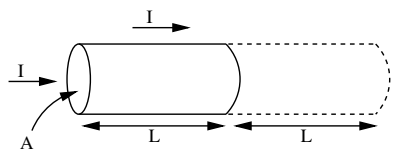

$$\Delta q = neAL$$

It takes a time Δt for this charge to completely leave this volume: $v_d \Delta t = L \Longrightarrow \Delta t = L/v_d$. In time Δt each charge carrier has migrated a distance L.

$$\begin{aligned} I &= \frac{\Delta q}{\Delta t} = \frac{neAL}{\frac{L}{v_d}} = neAv_d \\ J &= \frac{I}{A} = nev_d \end{aligned}$$

v_d is not the velocity of the electrons. Typically the electron velocity $v_e \sim 10^6$ m/s. But the electrons hit things like atoms, impurities, and imperfections in the conductor. This gives rise to **resistance**. So the electrons don't travel ballistically (in straight lines). They bounce around and make slow progress down the wire.

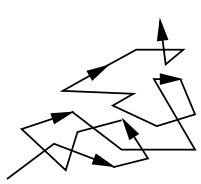

So the drift velocity $v_d << v_e$. Typically $v_d \sim 10^{-3}$ m/s. (If you bounce off the walls, it takes longer to get out of the room.)

It doesn't take long for the light to go on when you flip a switch for the same reason that it doesn't take long for water come out of a hose when you turn on the faucet. There's already water in the hose. Similarly there are electrons in the wire, and they all

start to drift when you flip the switch. $\overrightarrow{\ominus}\overrightarrow{\ominus}\overrightarrow{\ominus}\overrightarrow{\ominus}\overrightarrow{\ominus}$

Resistance

If we apply a voltage ΔV across the ends of a conductor (or wire), a current I flows. The ratio $\Delta V/I$ is called the **resistance** R:

$$R = \frac{\Delta V}{I} \tag{5}$$

If I is big, $R = \Delta V/I$ is small $\Longrightarrow$ small resistance means big current. If I is small $\Longrightarrow$ large resistance.

Units

$$\begin{aligned} [R] &= \text{ohm} \\ 1\text{ohm} &= 1\Omega = 1\frac{\text{volt}}{\text{ampere}} = 1\frac{V}{A} = \left[\frac{\Delta V}{I}\right] \end{aligned}$$

If $R =$ constant independent of ΔV or I, then the current I flowing through a device is directly proportional to the potential difference ΔV across the device:

$$\Delta V = IR \qquad\qquad R = \text{constant} > 0$$

This is called **Ohm's Law**.

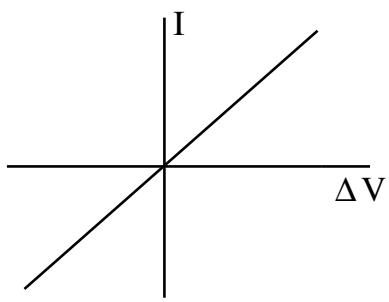

Note that non-ohmic devices are possible, e.g., a diode has a resistance that depends on ΔV:

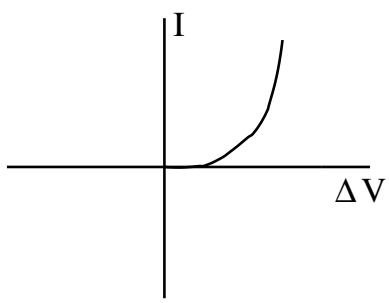

Resistivity

Sometimes it is more convenient to think in terms of $\vec{E}$ and $\vec{J}$ at a point in the conductor, rather than the voltage drop ΔV across a conductor and the current I flowing through it. In this case we define the resistivity ρ to be the ratio E/J. Here we are assuming that $\vec{J}$ points in the direction of $\vec{E}$. (That's how we defined the direction of $\vec{J}$.)

$$\rho = \frac{E}{J} \qquad \text{definition of } \rho$$

Units: $[\rho] = \left[\frac{E}{J}\right] = \frac{V/m}{A/m^2} = V \cdot m/A = \Omega \cdot m$ which is called an "ohm-meter".

Vector form: $\vec{J} = \vec{E}/\rho$

We can define the **conductivity**: $\sigma = 1/\rho$. Then

$$\vec{J} = \sigma \vec{E} \tag{6}$$

Units: $[\sigma] = (\Omega \cdot m)^{-1}$ which is called "reciprocal ohm-meter" or "inverse ohm-meter" or "mhos per meter".

Resistivity is a property of the material, not its dimensions. Resistance depends on the material and the dimensions of the <u>resistor</u>. A resistor is a conductor with a specified resistance, e.g., 100 Ω. You put resistors in circuits. They are denoted in circuit diagrams by a wiggly line.

What is the relation between resistance and resistivity?

Consider a resistive wire segment of cross-sectional area A, length L, with a voltage drop ΔV across it. Assume $\vec{J}$ and $\vec{E}$ are constant everywhere within the wire.

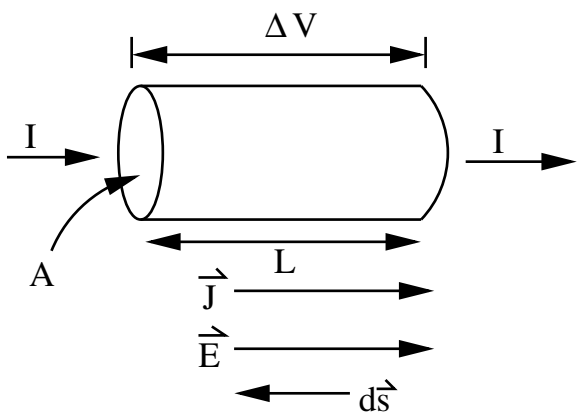

Then

$$\begin{aligned}
\Delta V &= -\int_{(-)}^{(+)} \vec{E}\cdot d\vec{s} = EL \qquad\qquad J = \frac{I}{A} \\
\rho = \frac{E}{J} &= \frac{\Delta V/L}{I/A} = \frac{V}{I}\frac{A}{L} = R\,\frac{A}{L} \\
R &= \rho\frac{L}{A} \qquad\qquad (7)
\end{aligned}$$

We can check this by going backwards:

$$\rho\cdot\frac{L}{A} = \frac{EL}{JA} = \frac{\Delta V}{I} = R \qquad (8)$$

To understand why this formula makes sense, we need to realize that resistance results from electrons bumping into things (atoms, impurities, imperfections, the walls of the wire) as they travel down the wire. The longer the wire is, the more things there are to bump into $\Longrightarrow R \propto L$. The thicker the wire is, the easier it is to go around the road blocks $\Longrightarrow R \propto 1/\text{Area}$. So $R = \rho L/A$

Note that $\rho \sim T$, because the hotter the wire is, the more the atoms vibrate, the harder it is for electrons to get by jostling atoms. Your book gives the formula $\rho = \rho_o[1+\alpha(T-T_o)]$.

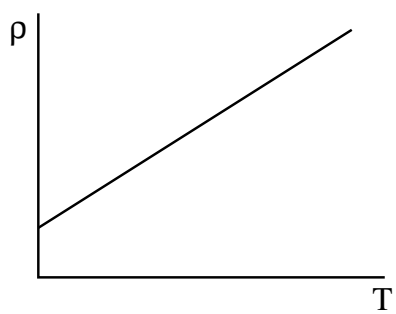

Power Dissipation

Suppose there is a voltage drop across some circuit element or device, e.g., a light bulb, a resistor, a motor, etc.

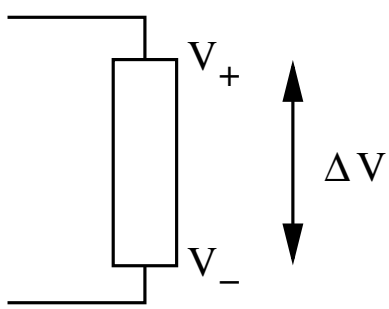

As the charge $dq = Idt$ moves through that potential drop V, it gives up potential energy dV

$$dU = dq\Delta V = Idt\Delta V \tag{9}$$

This is like a ball falling down - it loses potential energy and gains kinetic energy. The potential energy lost by the charge is converted into some other form of energy, e.g. heat, light, work, etc. The rate of energy transfer is called power P.

$$P = \frac{dU}{dt} = I\Delta V \tag{10}$$

Units: $U = q\Delta V \implies \Delta V = U/q$
$[P]$ = Volts · Amperes = (1 J/C) (1 C/s) = 1 J/s = 1 W.

If we have a resistor $R = \Delta V/I$, then $\Delta V = IR$. Using this, we can write:

$$P = I\Delta V = I(IR) = I^2R \Longrightarrow P = I^2R$$
$$P = I\Delta V = \frac{\Delta V}{R}\Delta V = \frac{(\Delta V)^2}{R} \Longrightarrow P = \frac{(\Delta V)^2}{R}$$

These formulas describe power dissipation in a resistor.

Note: A light bulb burns out when you first turn it on because the filament (i.e., the resistor) is cold and its resistance is low. Hence the power dissipated $P = (\Delta V)^2/R$ is high and the filament burns out.

Emf

Recall that when a battery charges a capacitor, it takes + charge from the negatively charged plate and puts it on the positively charged plate. We can think of the battery as a charge pump. It does work.

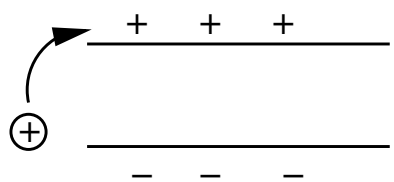

The amount of work done per unit charge is called the *emf* $\mathcal{E}$ ("electromotive force"):

$$\mathcal{E} = \frac{dW}{dq} \tag{11}$$

$\mathcal{E}$ is a scalar. The battery is an example of an emf device. Emf devices are charge pumps. They provide emf, i.e., they do work. Other examples: electric generators, solar cells, etc. The gravitational analogy of a battery is an escalator or an elevator that goes up.

Units: $[\mathcal{E}]$ = Joule/ Coulomb = Volt. (e.g. 12V battery)

Gravitational analogy: The work done per unit mass in lifting a weight is the analog of emf $\mathcal{E}$. The potential energy per unit mass that the mass gains is the analog of electric potential. The difference between $\mathcal{E}$ and ΔV is like the difference between going uphill and being able to roll downhill.

Calculating Current

To show that $\mathcal{E} = IR$, we can use a technique that is useful in analyzing circuits.

Potential Around a Loop

If we start at a point in the circuit which has potential V_a, then go around the circuit adding and subtracting voltages as we meet different circuit elements, and finally return to pt. A, our voltage must again be V_a. Thus, all those voltage differences must sum to zero.

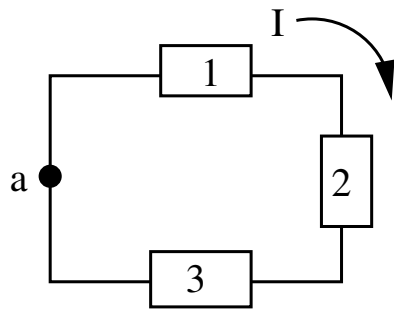

$$V_a + \Delta V_1 + \Delta V_2 + \Delta V_3 \cdots = V_a$$

This is called the **loop rule**: The algebraic sum of the changes in potential encountered in a complete transversal of any circuit must be zero. The loop rule is the other Kirchhoff rule. Kirchhoff's rules are used in analyzing circuits.

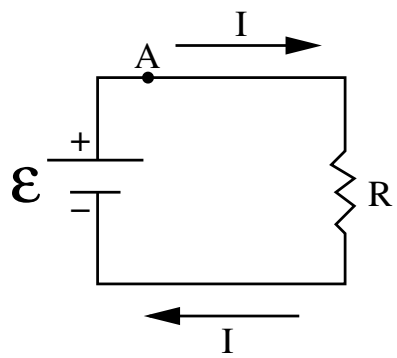

In our simple circuit, if we start at pt. A, then,

$$V_a - IR + \mathcal{E} = V_a \quad \text{or} \quad \mathcal{E} - IR = 0$$
$$\Longrightarrow \mathcal{E} = IR \quad \text{or} \quad I = \frac{\mathcal{E}}{R}$$

Recipe for Analyzing Circuits

1. Choose the directions of the currents in each segment or section of the circuit. Sometimes we may not know the true direction of the current I. Just guess a direction for I, and adhere to the resistance rule. If you choose wrong, you will find $I < 0$ which means the current goes in the opposite direction from your choice.

2. Choose the direction in which you mentally go around each loop in the circuit.

3. Use the loop rule to write down equations. Keep the following in mind:

   (a) **Resistance Rule:** If you mentally pass through R in the direction of the current I, the potential decreases by $-IR$. This is like going downhill. If you go against the current through R, you gain potential $+IR$. This is like going uphill.

   (b) **EMF Rule:** If you mentally pass through an ideal emf device from $-$ to $+$, then you gain potential $+\mathcal{E}$. If you go in the opposite direction, you lose potential $-\mathcal{E}$.

4. Use the junction rule to help write down equations. Sometimes we meet junctions or branches in circuits. In this case, we apply the **junction rule:**

$$I_1 = I_2 + I_3 \tag{12}$$

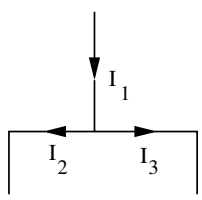

"The sum of the currents approaching any junction must be equal to the sum of the currents leaving that junction."

Kirchhoff's rules are the loop rule and the junction rule. We will use these rules to understand how to treat resistors in circuits.

Resistors in Series

An example of resistance in series is resistors that come one right after the other like a string of Christmas tree lights. Connected resistances are said to be in series when the potential difference applied across the combination is the sum of the resulting differences across the individual resistances.

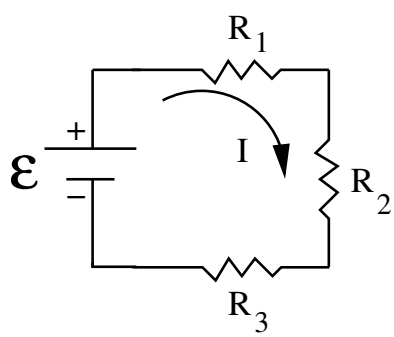

In the above example we want to find a resistor R_{eq} that is equivalent to R_1, R_2, R_3.

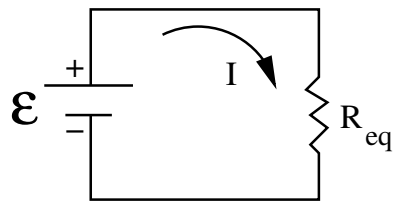

To do this apply the loop rule and go around the circuit:

$$\begin{aligned} \mathcal{E} - IR_1 - IR_2 - IR_3 &= 0 \\ \mathcal{E} &= IR_1 + IR_2 + IR_3 \\ \mathcal{E} &= I(R_1 + R_2 + R_3) \\ \mathcal{E} &= IR_{eq} \end{aligned} \tag{13}$$

where $R_{eq} = R_1 + R_2 + R_3$

In general one adds resistances in series to get an equivalent resistance:

$$R_{eq} = \sum_{j=1}^{n} R_j \tag{14}$$

where n is the number of resistors in series. In the book, "real" emf devices have a resistance r in series with an ideal emf device. An ideal emf device has no resistance.

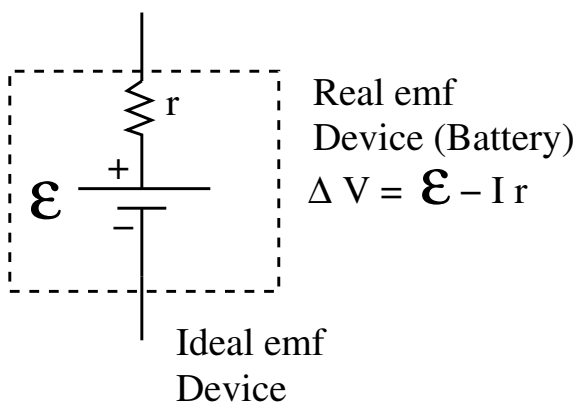

A voltage divider consists of 2 (or more) resistors in series:

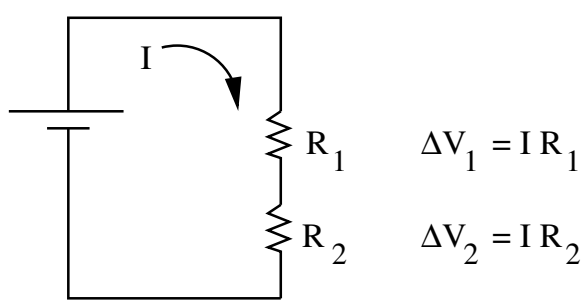

If $R_1 > R_2$, $\Delta V_1 > \Delta V_2$.

Potential Differences

To find the potential difference between two points in a circuit, start at one point and transverse the circuit to the other, following any path, and add algebraically the changes in potential that you encounter. Recall that the potential difference $V_a - V_b$ between two points is independent of the path you take between them.

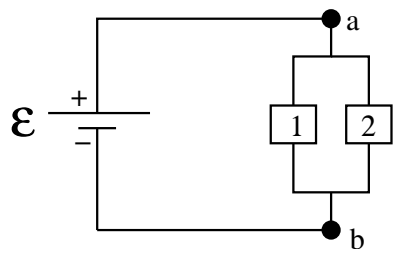

$V_a - V_b$ is the same whether you go through 1 or through 2.

Resistances in Parallel

An example of 2 resistances in parallel is:

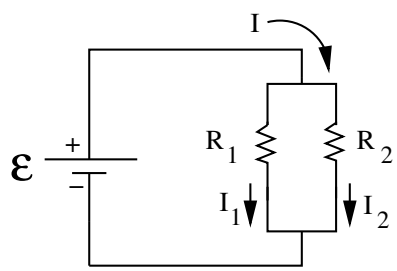

Connected resistances are said to be in parallel when a potential difference that is applied across the combination is the same as the resulting potential difference across the individual resistances. Thus the potential drop across R_1 is the same as that across R_2: $\Delta V = I_1 R_1$ and $\Delta V = I_2 R_2$.

To find an equivalent resistance R_{eq} that can replace $R_1 + R_2$ without changing the current I through the combination or the voltage ΔV across it, we note that the junction rule tells us

$$I = I_1 + I_2 \tag{15}$$

$$\Delta V = I_1 R_1 \Longrightarrow I_1 = \frac{\Delta V}{R_1} \qquad \text{and} \qquad \Delta V = I_2 R_2 \Longrightarrow I_2 = \frac{\Delta V}{R_2}$$

$$\begin{aligned} I &= I_1 + I_2 \\ &= \frac{\Delta V}{R_1} + \frac{\Delta V}{R_2} \\ &= \Delta V \left(\frac{1}{R_1} + \frac{1}{R_2} \right) \\ &= \Delta V \left(\frac{1}{R_{eq}} \right) \end{aligned} \tag{16}$$

where

$$1/R_{eq} = 1/R_1 + 1/R_2 \tag{17}$$

In general we add inverse resistances when they are in parallel:

$$\frac{1}{R_{eq}} = \sum_{j=1}^{n} \frac{1}{R_j} \tag{18}$$

where there are n resistances in parallel.

Comparison of resistors and capacitors:

	Series	Parallel
Resistors	$R_{eq} = \sum_{j=1}^{n} R_j$	$\frac{1}{R_{eq}} = \sum_{j=1}^{n} \frac{1}{R_j}$
Capacitors	$\frac{1}{C_{eq}} = \sum_{j=1}^{n} \frac{1}{C_j}$	$C_{eq} = \sum_{j=1}^{n} C_j$

Note that we can rearrange circuits to topologically equivalent conformations because wires are equipotentials. Here are some examples:

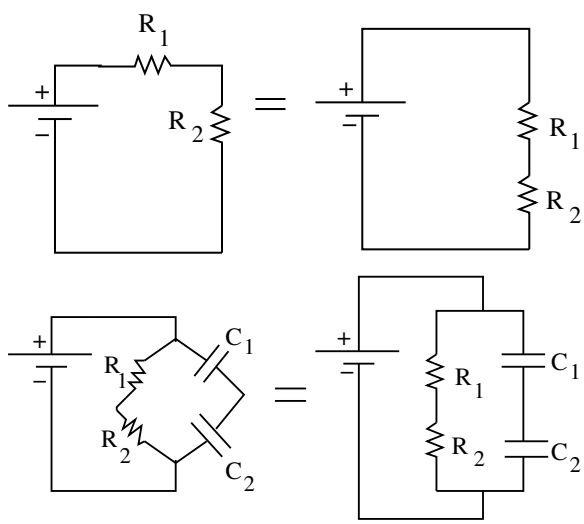

Example: Problem 21.30

Three 100 Ω resistors are connected as shown. The maximum power that can safely be delivered to any one resistor is 25.0 W. (a) What is the maximum voltage that can be applied to the terminals a and b? (b) For the voltage determined in part (a), what is the power delivered to each resistor? What is the total power delivered?

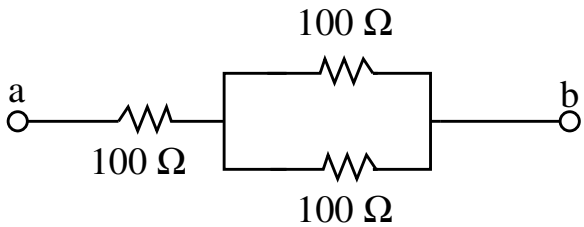

Solution: The power dissipated in a resistor is given by $P = (\Delta V)^2/R$. So the voltage drop across the resistor is

$$\Delta V = \sqrt{PR} \tag{19}$$

We need to find which resistor will have the most power dissipated. It will be the resistor with the biggest voltage drop. First let's find the equivalent resistance R_{eq} for the resistors in parallel. The resistors all have the same resistance. Let $R = 100\ \Omega$. Then

$$\frac{1}{R_{eq}} = \frac{1}{R} + \frac{1}{R} = \frac{2}{R} \tag{20}$$

or $R_{eq} = R/2 = 50\ \Omega$. So now our circuit looks like

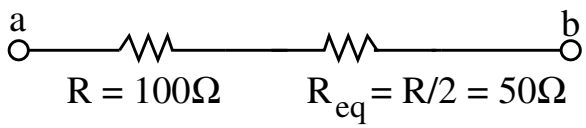

This is a voltage divider circuit. The voltage drop ΔV_1 across R is $\Delta V_1 = IR$ and the voltage drop across $\Delta V_{eq} = IR_{eq} = IR/2$. So $\Delta V_1 > \Delta V_{eq}$. In fact $\Delta V_1 = 2\Delta V_{eq}$. So the power dissipated in R will be greater than the power dissipated in R_{eq}. The maximum power that can be dissipated in a resistor is 25 W. So this is the power dissipated in the first resistor. The voltage drop across R is given by eq. (19): $\Delta V_1 = \sqrt{PR} = \sqrt{(25\text{ W})(100\ \Omega)} = \sqrt{2500\text{ V}^2} = 50$ V. The current through the resistor is $I = \Delta V_1/R = 50\text{ V}/100\ \Omega = 0.5$ A. The voltage drop from a to b is $\Delta V_{tot} = I(R+R_{eq}) = I(R+R/2) = 3IR/2 = 3(100\ \Omega)(0.5\text{ A})/2 = 75$ V.

(b) The power delivered to the first resistor is 25 W as we found in part a. Each resistor in parallel will have 1/2 the current going through it. So the power dissipated in each resistor in parallel is $P = (I/2)^2R = (0.5\text{ A}/2)^2(100\ \Omega) = 6.25$ W. The total power delivered is the sum of the power dissipated in each resistor: $P_{tot} = 25\text{ W} + 6.25\text{ W} + 6.25\text{ W} = 37.5$ W.

RC circuits

Charging a capacitor: Suppose the capacitor is initially uncharged. Then there is no voltage drop across it. When we close the switch, current starts to flow and the capacitor begins to charge up.

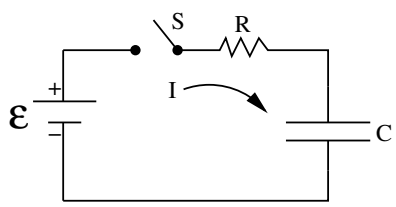

According to the loop rule, we get (using $q = C\Delta V \quad \Longrightarrow \quad \Delta V = q/C$)

$$\mathcal{E} - IR - \frac{q}{C} = 0$$

Going from the positively charged plate to the negatively charged plate in the direction of the current corresponds to a voltage drop,

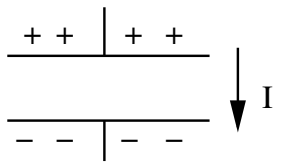

so we wrote $-q/C$. We rewrite the equation

$$\mathcal{E} = IR + \frac{q}{C} \qquad \Longrightarrow \qquad IR + \frac{q}{C} = \mathcal{E}$$

I and q are related by $I = dq/dt$. Plugging this in yields

$$R\frac{dq}{dt} + \frac{1}{C}q = \mathcal{E}$$

This is a 1st order linear differential equation for $q(t)$. The initial condition is $q = 0$ at $t = 0$. Initially, when $q = 0$, there is no voltage drop across C, so we have

$$\mathcal{E} = IR \tag{21}$$

As the charge q on the capacitor increases with time, IR becomes less important, i.e. the current decreases. Eventually, when the capacitor is fully charged

$$\mathcal{E} = \frac{q}{C} \tag{22}$$

and $I = 0$, i.e., current doesn't flow. So we want to solve:

$$R\frac{dq}{dt} + \frac{q}{C} = \mathcal{E}$$

We can rearrange the terms with q on one side and dt on the other:

$$\begin{aligned}
\frac{dq}{(q - C\mathcal{E})} &= -\frac{dt}{RC} \\
\int_0^q \frac{dq}{q - C\mathcal{E}} &= -\frac{1}{RC}\int_0^t dt \\
\ln\left[q - C\mathcal{E}\right]_{q=0}^{q=q} &= -\frac{t}{RC} \\
\ln\left(\frac{q - C\mathcal{E}}{-C\mathcal{E}}\right) &= -\frac{t}{RC}
\end{aligned}$$

Exponentiating both sides leads to

$$\begin{aligned}
\left(\frac{q - C\mathcal{E}}{-C\mathcal{E}}\right) &= e^{-t/RC} \\
q(t) &= C\mathcal{E}\left(1 - e^{-t/RC}\right) = Q\left(1 - e^{-t/RC}\right)
\end{aligned}$$

where Q is the maximum charge on the capacitor. This comes from eq. (21) which applies when the capacitor is fully charged and the potential drop across C is the emf $\mathcal{E}$ of the battery. Notice that at $t = 0$, $e^{-t/RC} = e^0 = 1$, $q(t = 0) = C\mathcal{E}(1 - 1) = 0$ as desired. At $t = \infty$, $e^{-t/RC} = 0, q(t = \infty) = C\mathcal{E}(1 - 0) = C\mathcal{E} = Q$ or $\mathcal{E} = q/C$ as desired.

The current

$$I = \frac{dq}{dt} = \frac{d}{dt}\left[C\mathcal{E}(1 - e^{-t/RC})\right] = \frac{\mathcal{E}}{R}e^{-t/RC} \tag{23}$$

So at $t = \infty$, $I = 0$. The voltage across the capacitor

$$V_C = \frac{q}{C} = \mathcal{E}\left(1 - e^{-t/RC}\right) \tag{24}$$

$V_C(t = 0) = 0$. $V_C(t = \infty) = \mathcal{E}$.

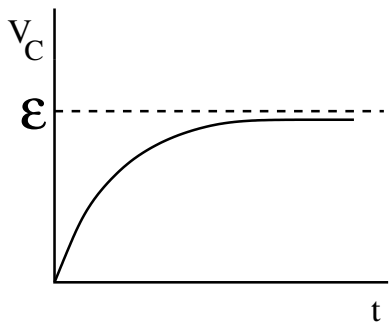

The voltage across the resistor is

$$V_R = IR = \mathcal{E}e^{-t/RC} \tag{25}$$

$V_R(t = 0) = \mathcal{E}$. $V_R(t = \infty) = 0$.

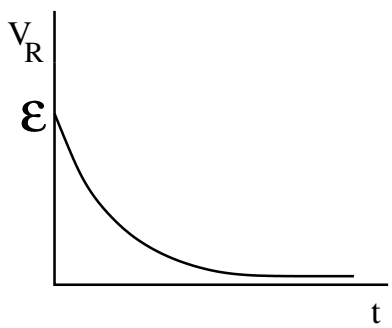

Notice that $V_R + V_C = \mathcal{E}$ at all times.

The time constant: In the exponent of $e^{-t/RC}$, RC has units of time because the exponent t/RC must be dimensionless. RC is called the time constant of the circuit. It is often denoted by τ, i.e., $\tau = RC$. It is the characteristic time involved in charging the capacitor, i.e. it sets the time scale. When $t = \tau = RC$, $e^{-t/RC} = e^{-1} = 1/e \sim 0.37$. So $(1 - e^{-t/RC})\Big|_{t=RC} \sim 0.63$. So when $t = RC$, the capacitor is charged up to 63% of being fully charged.

Discharging a capacitor

Suppose the capacitor is fully charged with charge q_0.

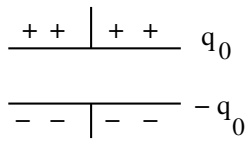

We can discharge the capacitor through a resistor R by closing the switch in the circuit shown. Since $I = dq/dt > 0$, this implies that q increases as time increases. In particular, the direction of I should be such that the charge on the capacitor increases with time, i.e., I flows toward the positively charged plate.

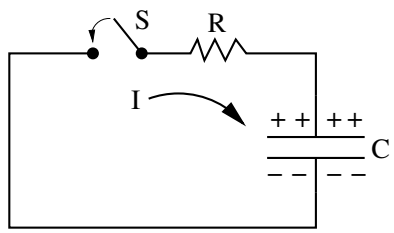

The loop rules gives

$$-\frac{q}{C} - IR = 0 \tag{26}$$

One way to get this is to set $\mathcal{E} = 0$ in the charging equation

$$\frac{q}{C} + IR = 0 \tag{27}$$

Plug in $I = dq/dt$ to get

$$R\frac{dq}{dt} + \frac{q}{C} = 0 \tag{28}$$

Solution:

$$q(t) = q_0 e^{-t/RC} \tag{29}$$

Discharging capacitor:

$$q(t = 0) = q_0, \qquad q(t = \infty) = 0$$

At characteristic time $t = RC$, $q = q_0 e^{-1} = (0.37)q_0$. So only 37% of the original charge remains on the capacitor at $t = RC$.

Current during discharge:

$$I = \frac{dq}{dt} = -\frac{q_0}{RC} e^{-t/RC} = -I_0 e^{-t/RC} \tag{30}$$

where $I_0 = \frac{q}{RC}$. The minus sign indicates that the discharging current is in the opposite direction from the charging current.